PROJECT: PREPARED BY: TYPE:

rayhil

QUE 14

MONOPOINT



SPECIFICATIONS

Wattage	10W	Material	Aluminum
Input Voltage	24V	Finish	Black / White / Brushed Nickel / Brass
CRI	≥90	Dimming	Triac/ELV/MLV/1-10V
Temperature	2700K/3000K/3500K	IP Rating	IP20
Efficacy	80LM/W	Warranty	5 Years
Lumens	800LM	Tilt	90 Degree
		Rotation	360 Degree

ORDERING GUIDE

QUE14MONO - 10 - - - ***Example: QUE14MONO-10-27-BK***

Model	Power	CCT	Beam Angle	Finish
QUE14MONO	**10** 10W	**27** 2700K **30** 3000K **35** 3500K	**24** 24° **36** 36° **45** 45°	**BK** Black **WT** White **BN** Brushed Nickel **BR** Brass

rayhil

QUE 14

MONOPOINT

DIMENSION

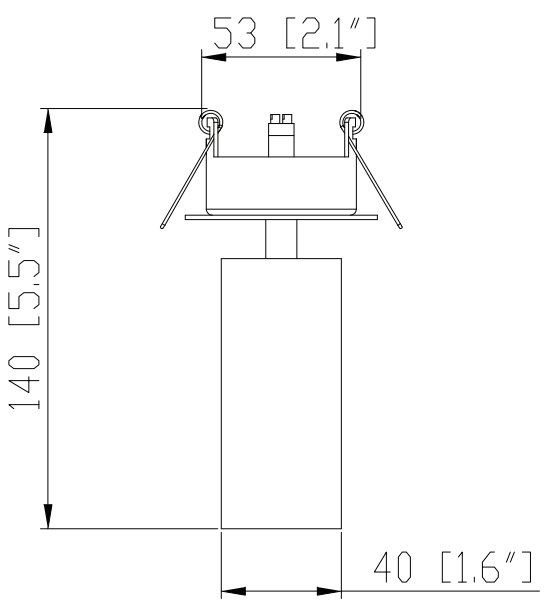

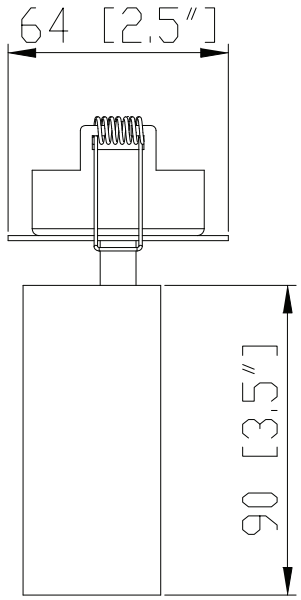

rayhil

QUE 14

MONOPOINT

FINISH



Black



White



Brushed Nickel



Brass

rayhil

QUE 14

MONOPOINT

DRIVERS



Model	LB55500
Wattage	120W
Dimensions	7.74” × 4.07” × 1.57”
Temperature	IP67
Dimming	Triac/MLV/ELV/0-10V



Model	LB55467
Wattage	30W
Dimensions	4.97” x 3.15” x 1.59”
Temperature	IP67
Dimming	Triac/MLV/ELV/0-10V



Model	LB55501
Wattage	200W
Dimensions	8.17” × 4.57” × 1.57”
Temperature	IP67
Dimming	Triac/MLV/ELV/0-10V



Model	LB55468
Wattage	60W
Dimensions	4.97” x 3.15” x 1.59”
Temperature	IP67
Dimming	Triac/MLV/ELV/0-10V



Model	LB55502
Wattage	300W
Dimensions	9.13” × 4.57” × 1.57”
Temperature	IP67
Dimming	Triac/MLV/ELV/0-10V



Model	LB55469
Wattage	96W
Dimensions	4.97” x 3.15” x 1.59”
Temperature	IP67
Dimming	Triac/MLV/0-10V